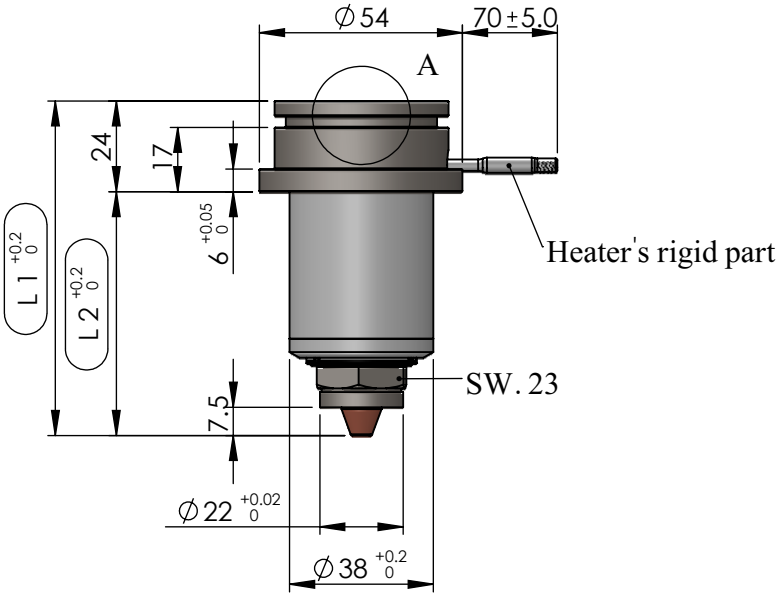

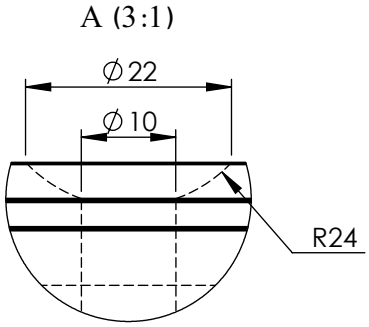

Detail view of nozzle's entry

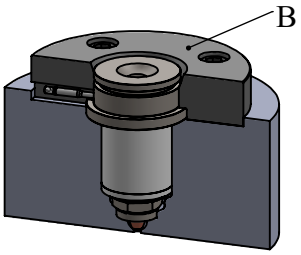

Isometric view of nozzle's placement in the mold

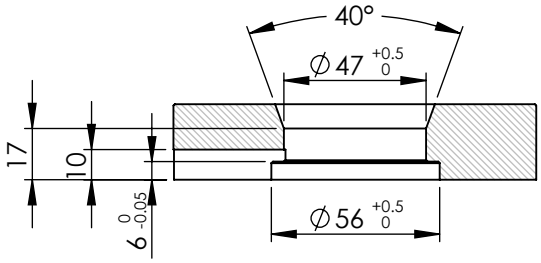

B : Detail view of injection ring

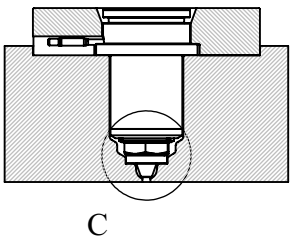

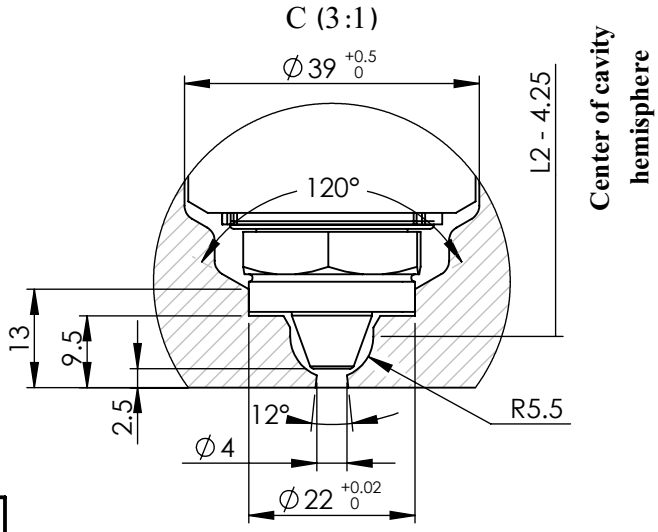

Detail view of nozzle's injection point

* There are 13 standard available sizes of this nozzle type as listed below.

** The "L1" length can be increased up to 250 mm by customer's order.

NOZZLE S 54 G 102 *	L1 (mm) **	L2 (mm)	Heater's Power (W)
S 54 G 102 * 78.5	78.5	54.5	300
S 54 G 102 * 88.5	88.5	64.5	300-350
S 54 G 102 * 98.5	98.5	74.5	350-400
S 54 G 102 * 108.5	108.5	84.5	400-450
S 54 G 102 * 118.5	118.5	94.5	400-450
S 54 G 102 * 128.5	128.5	104.5	450-500
S 54 G 102 * 138.5	138.5	114.5	500-600
S 54 G 102 * 148.5	148.5	124.5	600-650
S 54 G 102 * 158.5	158.5	134.5	600-650
S 54 G 102 * 168.5	168.5	144.5	600-650
S 54 G 102 * 178.5	178.5	154.5	650-700
S 54 G 102 * 188.5	188.5	164.5	650-700
S 54 G 102 * 198.5	198.5	174.5	700-750

Title : **NOZZLE**	iHCO
Model : **S 54 G 102 * L1**	Tel. No.: (+98)2122436853 Website : www.ihco.co