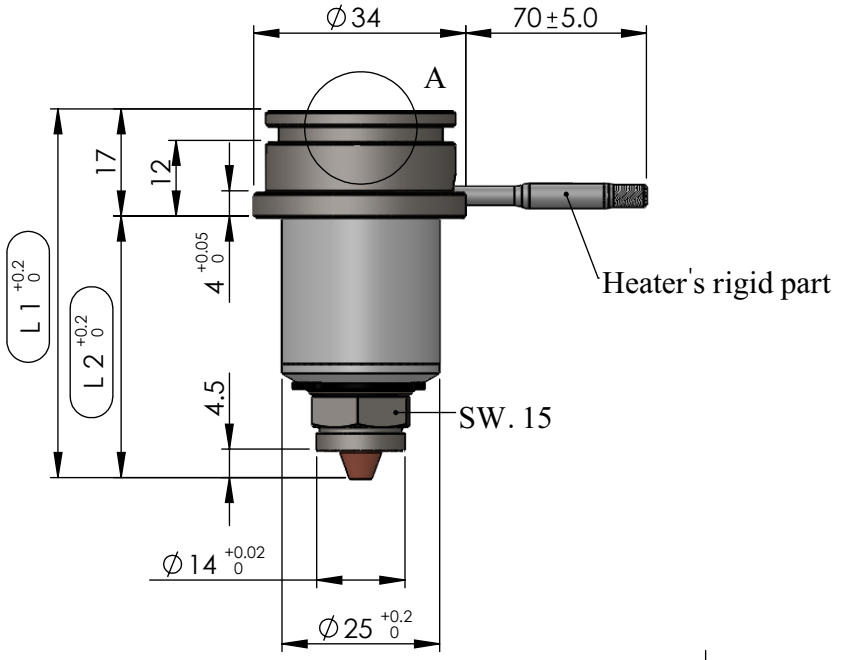

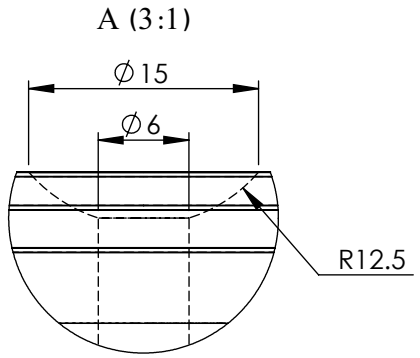

Detail view of nozzle's entry

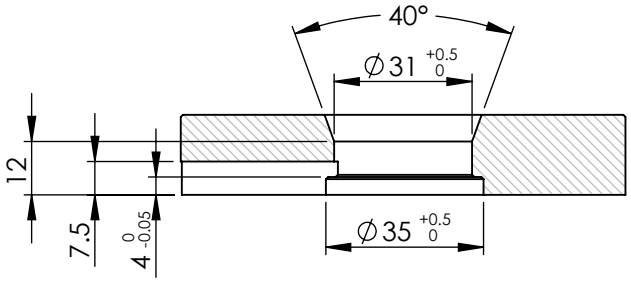

B : Detail view of injection ring

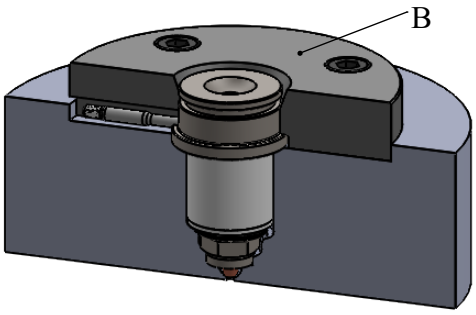

Isometric view of nozzle's placement in the mold

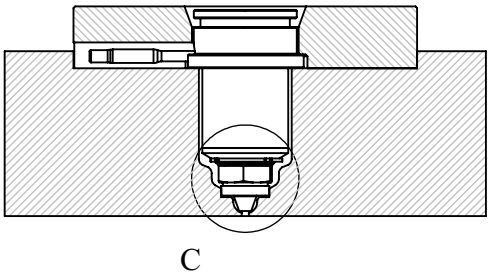

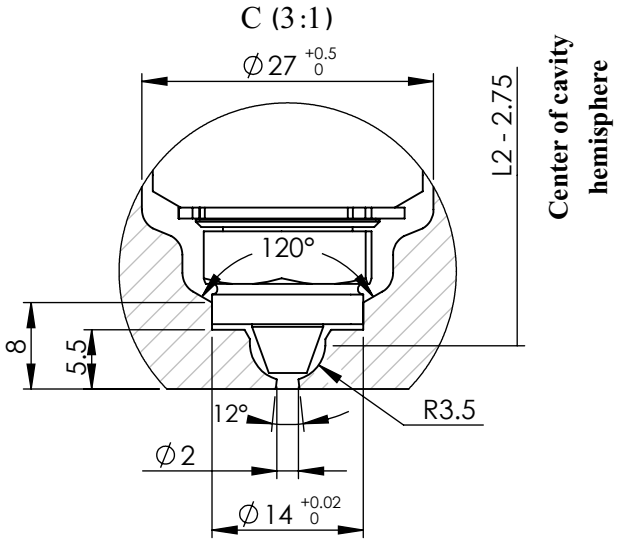

Detail view of nozzle's injection point

* There are 8 standard available sizes of this nozzle type as listed below.

** The "L1" length can be increased up to 150 mm by customer's order.

NOZZLE S 34 G 102 *	L1 (mm) **	L2 (mm)	Heater's Power (W)
S 34 G 102 * 53.5	53.5	36.5	200
S 34 G 102 * 63.5	63.5	46.5	200-250
S 34 G 102 * 73.5	73.5	56.5	250-300
S 34 G 102 * 83.5	83.5	66.5	250-300
S 34 G 102 * 93.5	93.5	76.5	300-350
S 34 G 102 * 103.5	103.5	86.5	300-350
S 34 G 102 * 113.5	113.5	96.5	350-400
S 34 G 102 * 123.5	123.5	106.5	400

Title : **NOZZLE**	iHCO
Model : **S 34 G 102 * L1**	Tel. No.: (+98)2122436853 Website : www.ihco.co