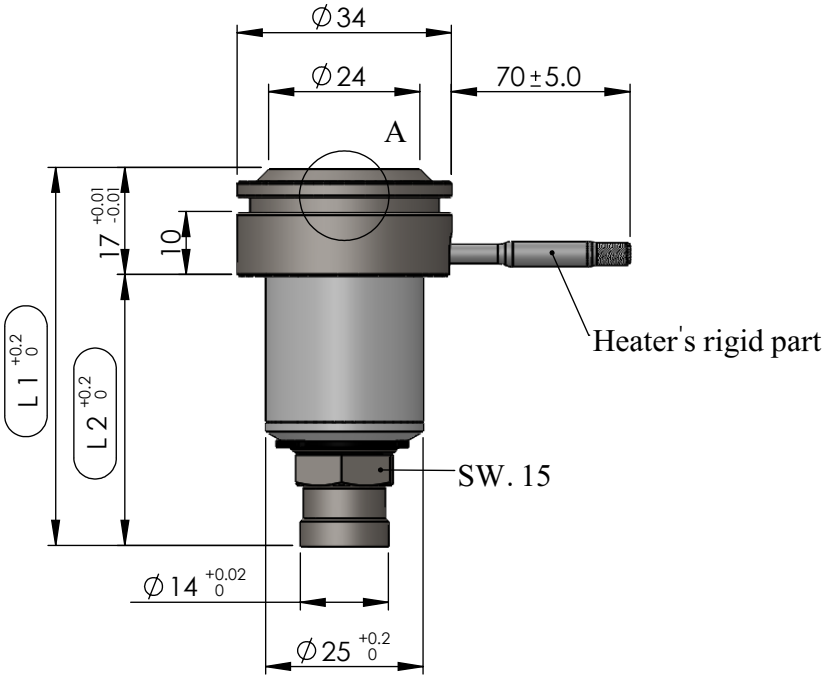

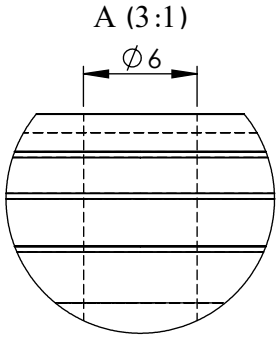

Detail view of nozzle's entry

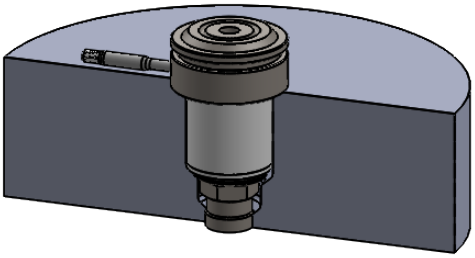

Isometric view of nozzle's placement in the mold

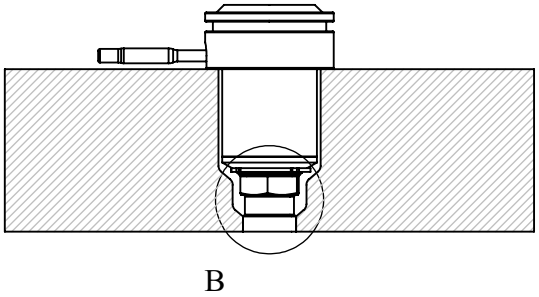

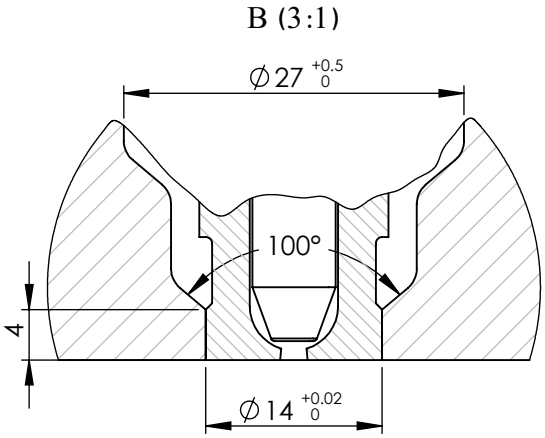

Detail view of nozzle's injection point

* There are 8 standard available sizes of this nozzle type as listed below.

** The "L1" length can be increased up to 150 mm by customer's order.

NOZZLE M 34 N 102*	L1 (mm)**	L2 (mm)	Heater's Power (W)
M 34 N 102 * 55	55	38	200
M 34 N 102 * 65	65	48	200-250
M 34 N 102 * 75	75	58	250-300
M 34 N 102 * 85	85	68	250-300
M 34 N 102 * 95	95	78	300-350
M 34 N 102 * 105	105	88	300-350
M 34 N 102 * 115	115	98	350-400
M 34 N 102 * 125	125	108	400

Title : **NOZZLE**	iHCO Tel. No.: (+98)2122436853 Website : www.ihco.co
Model : **M 34 N 102 * L1**	