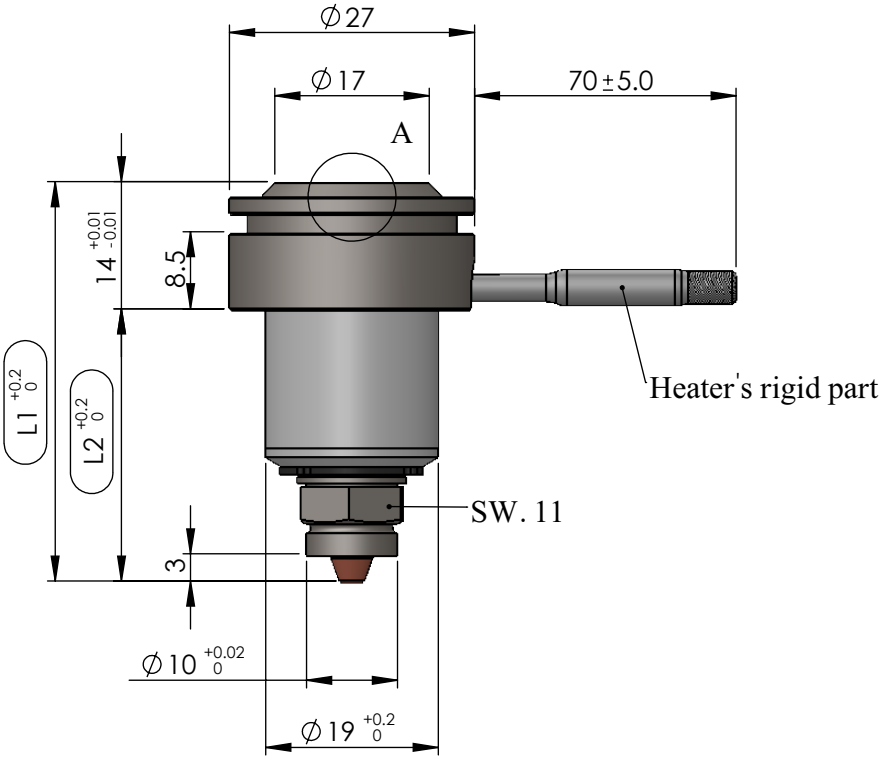

A (3:1)

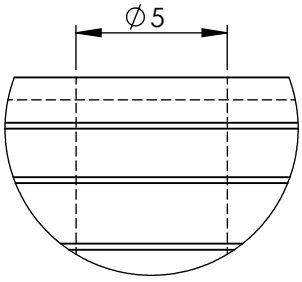

Detail view of nozzle's entry

Isometric view of nozzle's placement in the mold

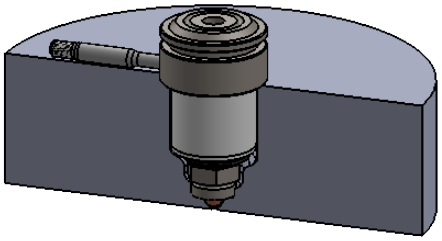

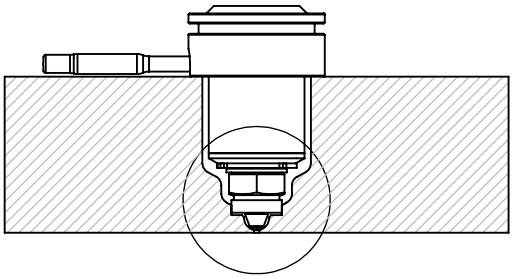

B

B (3:1)

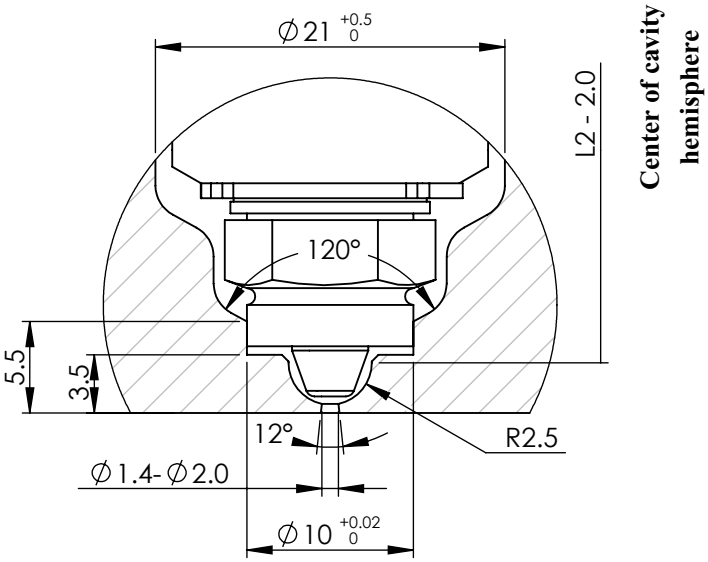

Detail view of injection point

* There are 7 standard available sizes of this nozzle type as listed below.

** The "L1" length can be increased up to 130 mm by customer's order.

NOZZLE M 27 G 102 *	L1 (mm) **	L2 (mm)	Heater's Power (W)
M 27 G 102 * 46	46	32	180
M 27 G 102 * 56	56	42	200
M 27 G 102 * 66	66	52	200-250
M 27 G 102 * 76	76	62	250-300
M 27 G 102 * 86	86	72	250-300
M 27 G 102 * 96	96	82	250-300
M 27 G 102 * 106	106	92	300

Title : **NOZZLE**	iHCO
Model : **M 27 G 102 * L1**	Tel. No.: (+98)2122436853 Website : www.ihco.co